AGENDA
ARTS COMMISSION
May 14, 2026

Hybrid Meeting In-person and via Zoom

Join Zoom Meeting
https://us02web.zoom.us/j/86948892921?pwd=TnE2QjM3MnQySFZueG9iZlhraTlsUT09
Meeting ID: 869 4889 2921
Passcode: 8765309

One tap mobile +12532158782,,86948892921# US (Tacoma)
+12532050468,,86948892921# US
Accessibility
The City of Ellensburg strives to make our services, programs, and activities readily accessible.

- Closed Captioning is available to Zoom viewers. To enable closed captioning, you will need to click on the “CC” button at the bottom of your Zoom screen and then select either “Show Subtitle” or “View Full Transcript."
- Members of the public who do not speak English or who have limited proficiency may request an interpreter if they wish to participate in public meetings.
- The City will provide reasonable accommodation for members of the public with disabilities.

Rules for Public Comment
Any person engaging in conduct that disrupts, disturbs, or otherwise impedes the orderly conduct of the meeting including but not limited to:

1. Unduly repetitive or irrelevant remarks;

The City of Ellensburg strives to make our services, programs, and activities readily accessible and usable by individuals with disabilities. Reasonable accommodations will be made upon request. Please furnish the ADA Coordinator with your request in sufficient time for the City to provide a reasonable accommodation. A Request for Accommodation form may be obtained on the first floor of City Hall or by calling the City of Ellensburg ADA Coordinator at (509) 962-7222 or email ADAcoordinator@ci.ellensburg.wa.us

2. Use of intimidating, threatening. or abusive language;
3. disobedience of an order to be seated or to discontinue further comments;
4. and/or engaging in violent behavior,

will be deemed out of order and may be removed from the meeting and/or have his or her virtual microphone muted.

CITY OF ELLENSBURG
ARTS COMMISSION AGENDA
Council Chambers
501 North Anderson Street
Ellensburg, WA 98926
And remotely via Zoom
Thursday, May 14, 2026
4:00 PM - Regular Meeting

1. Call to Order and Roll Call

1.A Roll Call: Commissioner Eyre, Commissioner Dougherty, Commissioner Snedeker, Commissioner Wenz, Commissioner Young, Commissioner Lopez, Council Member Beauchamp

2. Approval of Agenda (No Public Comment)

2.A Review and approve the May 14, 2026, Ellensburg Arts Commission agenda as presented.

3. Public Comment

4. Approval of Minutes

4.A Review and approve the April 9, 2026 Arts Commission meeting minutes as presented.

5. Budget/Financial Report

5.A YTD 2023 Arts Commission Budget Update

6. New Business

6.A **UPCOMING EVENTS:**

- Thursday, MAY 21, 2026 5:00-8:00 pm PechaKucha: Breaking Through the Soil
- Saturday, May 30, 2026 11:00-1:00 pm Pastorial Poetry at Irene Rinehart Park (registration required)
- Monday, June 1, 2026 11:00 am Inspire WA in Ellensburg at Gallery One
- Wednesday, June 10-Friday June 12th Creative District Convening in Moses Lake

6.B Removal/Relocation of metal archway sculpture on Main Street--Easement expired.

6.C Project Grant: Venue Change Request: ECR/Gust Fest

7. Unfinished Business

7.A

- Bus Shelters: General Conversation based on recent conversations with transit
- Bus Shelters: Call for Rotary Park
- Bus Shelter: Brooklane Village--Art Selection--Jeannie Johnson, selected artist
- Bus Shelters: Sue Wright update--approved an moving forward & Erin Oostra update
- Upcoming locations: Fish Food Bank and 11th & Wildcat Way (Northbound)

7.B Updates:

- Mural Festival (Building owner's permission etc.)
- Donation of Sculptures by Tim Cornia in downtown nodes 30 (existing) 31 (new)
- A-250 Planning Update: Picnic etc.

7.C Community Calendar Update

8. Subcommittee Business

8.A

1. Project Grant/Funding & Advocacy Jerry/Alex/Jensen-Staff
2. First Friday Art Walk: Matt/Therese/Jensen-Staff--Review Windsock and Decal Design from Matt and pricing
3. City Art/Public Art: Jerry/Alex/Jeff/Matt
4. Awards & Distinctions: Jeff/Therese/Alex-Staff--REVIEW Timeline for Award season
5. Ellensburg Creative District: Staff/Jeff/Alex/Threse

9. Staff Update/Discussion Items

10. Commission Representative Update

11. Adjournment

For more information on the Ellensburg Arts Commission, contact Arts & Economic Development Manager Kelle Vandenberg at 509-962-7149.
The Contents of this agenda have been photocopied on recycled paper.

CITY OF ELLENSBURG **Arts Commission Meeting Minutes**

Meeting Date of Meeting **April 9, 2026**
Start Time of Meeting **4:08 PM**
Place of Meeting **City Hall, Council Conference Room**

1. **Call to Order and Roll Call of Members**

1.A Chair Eyre, Commissioner Dougherty, Commissioner Snedeker, Commissioner Wenz, Commissioner Young, Commissioner Lopez, Jerry Dougherty
Absent: Jensen Lopez, excused
Welcome guests: Teresa Chanes, and Jodi Polak

2. **Public Comment**

No public comment

3. **Approval of Agenda**

Motion to approve April 9, 2026, Arts Commission amended agenda as presented
By: Commissioner Young
Seconded: Commissioner Wenz
In Favor: All in favor
Opposed: None
Abstain: None
Motion Carries

4. **Approval of Minutes**

Motion to approve March 12, 2025, Arts Commission meeting minutes as presented.
By: Commissioner Wenz
Seconded: Commissioner Young
In Favor: All
Opposed: None
Abstain: None
Motion Carries

5. **Budget/Financial Report**

5.A YTD 2026 Arts Commission Budget Update
Staff presented budget updates.

DRAFT

6. New Business

6.A Ellensburg Rodeo Mural Approval Request

Jodi Polak, Rodeo Board and Teresa Chanes, EDA presented the plan for updating the Rodeo Mural on 3rd and Main. The cost will be $8,000.00. Rodeo Board is short of the total funds and working with the Fair Board to potentially cover the difference. Rodeo Board/EDA has the building owner's permission.

Motion to approve the restoration artwork of the Rodeo Mural as presented to the Arts Commission by Jodi Polak of the Rodeo Board.
By: Commissioner Snedeker
Seconded: Commissioner Dougherty
In Favor: All
Opposed: None
Abstain: None
Motion Carries

6.B Public Art Donation Consideration—Action Needed

Motion to accept the presented donation sculpture 1 at Node 30 and sculpture 2 at node 31 on the condition that the logo be removed sculpture 1 to comply with City Policy and City Risk Manager reviews sculpture 2 to access risk. Additionally, commission approves plagued that recognizes the donation of Tim Cornia, of buddy's barkery.

By: Commissioner Snedeker
Seconded: Commissioner Wenz
In Favor: All
Opposed: None
Abstain: None
Motion Carries

Action Item: Staff will get assessment of sculpture 2 from City Risk Manager and discuss changes with Tim Cornia. Concern centers around the extreme points at the ends of the sculpture and height, as they could pose a potential risk.

7. Unfinished Business:

7.A America 250 Planning Update-staff gave update. Next countywide planning meeting is Wednesday, April 15, 2026, at the County Court House.

7.B Admission Tax Discussion—next steps? Jerry sent staff his schedule to be able to assist with scheduling a meeting with City Manager to discuss further.

7.C Committee Scope of Work Project Update--March 31, 2026

The noted commissioner(s) below will review and/or write the subcommittee scope of work.

DRAFT

Jeff: Creative District-update: Jeff, Kelle have reviewed, Therese is in final review.

Therese/Matt/Jensen: update: finalized—no additional changes--complete.

Alex/Jerry: Public Art—then send to Matt and Jeff for review. Update: in progress

Action Item: Send template from Artwalk to Jerry and Alex

Project Grant/Funding—Alex/Jerry/Jensen

Update: staff send past Scope of Work for revisions to Alex/Jerry.

Awards & Distinction—Jeff/Therese—Done—staff to note as final

7.D Open Arts Commission Position—Update/Review/Action Item

Commissioners discussed both applications and the current need of the Arts Commission at length. While both applicants are qualified; working artists, arts teachers, and both have previous experience in the public sector, the commission felt that one candidate had an additional professional skill that is currently missing from the Arts Commission.

The selected applicant brings the ability to catalog and preserve the historical stories of the City Art Collection and help the commission make the collection accessible to all, to capture and share the emerging stories from the Creative District, increasing awareness and growing tourism, and to assist with overall enhancement of community outreach and engagement through meaningful connections and leadership.

Motion: The Arts Commission respectfully recommends that the City Council approve the appointment of Emily Jacobs to the Ellensburg Arts Commission, effective June 1, 2026.
By: Commissioner Snedeker
Seconded: Commissioner Wenz
In Favor: All
Opposed: None
Abstain: None
Motion Carries

8. Subcommittee Business:

8.A

- Project Grant Funding & Advocacy: Jerry/Alex/Staff/Jensen:

  Action Item: Update Project Grant Application. Staff sent 2025 application via email on 4/7/26 to subcommittee and again on 4/14/26

- First Friday Art Walk: Matt/Therese/Jensen/Staff:
    - New signage project—Some venues have expressed concerns with the flags and trying to secure them in the wind. The idea of having a windsock instead was discussed and has interest.

  Action Item: Staff to help set up FFAW meeting:

- City Art/Public Art: Jerry/Alex/Jeff (Matt):
  Action Item: Staff will set up a demo with Exhibit IQ with members of the Arts Commission and the EACA. The EACA board meeting is on 4/17/26, once discussed there, staff will set up demo.

- Awards & Distinctions: Jeff/Therese/Alex/Staff:

  Action Item: Need to discuss timeline and planning for nomination process for Arts Treasure & Art Advocate awards.

- Ellensburg Creative District & Advocacy: Staff/Jeff/Alex/Jensen/Therese

  Update: ECD is focused on implementation of the four goals of the 2026 ECD Strategic Plan:

  1. Establish and expand ECD regional presence.
  2. Finish implementation of the community calendar.
  3. Continuing grant writing workshop series.
  4. Creating an ArtPreneur Workshop: From Passion to Profits

  Action Item: Meeting on Monday, April 13th at 2:00pm

9. Staff Update/Discussion Items:

- Bus Shelter update current call and pending open call for Rotary Park with specific parameters.
- Update on National Poetry Month Planning
- Exhibit IQ
- Utilizing Zoom Webinar

10. Council Representative Update:

11. Adjournment Time: 5:31pm

DRAFT

DRAFT

	A	B	C	D	E	F	G	H
1	***PROPOSED* 2026 EAC Spending Plan**			**2026 BUDGET**	**2026 ACTUALS**	**Outstanding Balance**		**NOTES**
2		**REVENUES:**						
3								
4		**100-162-308-41-00-000-000**	**Beginning Fund**					
5								
6								
7								
8		**100 162 347 90 00**	**Artwalk**					
9		**Invoices went out 2/19/26**	The Clymer Art Gallery	$ 50.00		$ 50.00		
10		Updated payments as of 4/8/26	Ellensburg Rodeo Hall of Fame	$ 50.00	$ 50.00	$ -		
11		**Resent Invoices on 5/4/26**	Gallery One	$ 50.00	$ 50.00	$ -		
12			Gard Vintners	$ 50.00		$ 50.00		
13			Hotel Windrow	$ 50.00	$ 50.00	$ -		
14			IOOF (Ellensburg Odd Fellows)	$ 50.00		$ 50.00		
15			Kittitas County Historical Museum	$ 50.00	$ 50.00	$ -		
16								
17			Pearl Street Books	$ 50.00	$ 50.00	$ -		
18			Rock-n-Roll History Presents	$ 50.00		$ 50.00		
19			Royal Junction	$ 50.00		$ 50.00		
20			The INK	$ 50.00	$ 50.00	$ -		
21			The Mule	$ 50.00		$ 50.00		
22			The Palace Gallery	$ 50.00		$ 50.00		
23			Valo Cellars	$ 50.00	$ 50.00	$ -		
24			The Fitterer's Blding/Woodin Enterprises	$ 50.00		$ 50.00		
25						$ -		
26						$ -		
27						$ -		
28						$ -		
29		**TOTAL REVENUE**		**$ 750.00**	**$ 350.00**	**$ 400.00**		
30								
31								
32								
33		**EXPENDITURES:**		**2026 Budget**	**2026 ACTUALS**			
34		**100 162 573 20 31**	**Operating Supplies**					
35			Artwalk Annual meeting supplies	$ 100.00	$ 104.26	$ (4.26)		Name tags for all commissioners
36			Artwalk Sidewalk Signs	$ 1,500.00		$ 1,500.00		($1,000.00/signs $500.00 Printing posters)
37			Arts Treasure Award Engraving/Art Plaques	$ 100.00		$ 100.00		
38			Treasure Award Ceremony Supplies	$ 75.00		$ 75.00		
39			Arts Treasure/Advocate Awards (creation of award)	$ 500.00	$ 22.00	$ 478.00		
40			Poet Laureate Supplies	$ 1,500.00	$ 234.31	$ 1,265.69		
41								
42								
43								
44			**Total Operating Supplies**	**$ 3,775.00**		**$ 3,775.00**		
45								
46		**100 162 573 20 41**	**Professional Services**					
47			Americans For the Arts membership	$ 50.00		$ 50.00		
48			Inspire Washington Membership	$ 100.00		$ 100.00		
49								
50			**Total Professional Services**	**$ 150.00**		**$ 150.00**		
51								
52		**100 162 573 20 43**	**Professional Development-Travel**					
53			Conferences-Travel					
54								
55		**100 162 573 20 49**	**Professional Development-Misc**					
56		**100 162-573-20-44-013**	**Admin Services**	$ 13,000.00		$ 13,000.00		
57		**Total Professional Development**		**$ 13,150.00**		**$ 13,150.00**		
58								
59		**100 162 573 20 44**	**Advertising**					
60			NPR- for contract year	$ 1,920.00		$ 1,920.00		
61			ArtWalk Maps/Posters	$ 1,000.00		$ 1,000.00		
62		**Total Advertising**		**$ 2,920.00**		**$ 2,920.00**		
63								
64		**Ellensburg Creative District**						

	A	B	C	D	E	F	G	H
65								
66		**100-162-558-70-31-558-000**	**Ellensburg Creative District Supplies**	$ 4,000.00		$ 4,000.00		
67								
68		**100-162-558-70-35-558-000**	**Ellensburg Creative District-Small Tools/Eqpmt**			$ -		
69								
70		**100-162-558-70-41-558-000**	**Ellensburg Creative District-Prof. Services**			$ -		
71								
72		**100-162-558-70-42-558-000**	**Ellensburg Creative District-Communication & Marketing**			$ -		
73								
74		**Total Ellensburg Creative District**		**$ 4,000.00**		**$ 4,000.00**		
75								
76		**TOTAL EXPENDITURES**		**$ 23,995.00**		**$ 23,995.00**		**(UP TO $24,000 FOR OPERATIONS/CREATIVE DIST.)**
77								
78		**Grant Dispersement**		**2026 BUDGET**		**Balance**		
79		**100 162 573 20 40**	**2026 Art Grants**					
80								
81		CWU Sarah Spurgeon Gallery	Ferrous Exhibition	$ 2,500.00		$ 2,500.00		
82		Make Music Ellensburg	Strum-Along	$ 2,500.00		$ 2,500.00		
83		Ellensburg Community Radio	GustFest	$ 2,500.00		$ 2,500.00		
84		Calliope Arts	Shakespeare in Unity Park	$ 2,500.00		$ 2,500.00		
85		LHAF dba Valley Theatre Company	Rising Star: Tuck Everlasting	$ 2,500.00		$ 2,500.00		
86		Central Washington Dance Academy	Peter Pan	$ 2,500.00		$ 2,500.00		
87		Ellensburg Dance Ensemble	2026 Dance Season	$ 2,500.00		$ 2,500.00		
88		Jane Orleman	Totem Restoration	$ 1,000.00		$ 1,000.00		
89		Discovery Lab of Ellensburg	Shrub Steppe The Musical	$ 2,500.00		$ 2,500.00		
90		Nuwave Gallery	UNIFY: The Art of Coming Together	$ 1,000.00	$ 1,000.00	$ -		Submitted for reimbursement on 5/6/26
91						$ -		
92								
93		**Total Art Grants**		**$ 22,000.00**		**$ 21,000.00**		
94								
95		**Capitol/Public Art**		**2026 BUDGET**		**Balance**		
96		**100 162 573 20 40**	**Capital/Public Art**					
97			City Permanent Acquisition	$ 2,500.00	$ 500.00	$ 2,000.00		Erin Oostra $500.00 for bus shelter art
98			Public Art Plaquards	$ 1,500.00	$ 34.75	$ 1,465.25		For Barn Quilt and new donated public art piece at City Hall
99								
100								
101		**Total Capitol/Public Art**		**$ 4,000.00**				
102								
103		**Total Budget**	**$50,000.00**	**$ 49,995.00**				
104								
105								
106								
107		**Beginning Fund Balance**						
108								
109		100-162-308-31-00-000-000	Restricted Beginning Fund Balance	$ 24,207.00				
110		100-162-308-41-00-000-000	Committed Beginning Fund Balance	$ 4,353.00				
111								
112								

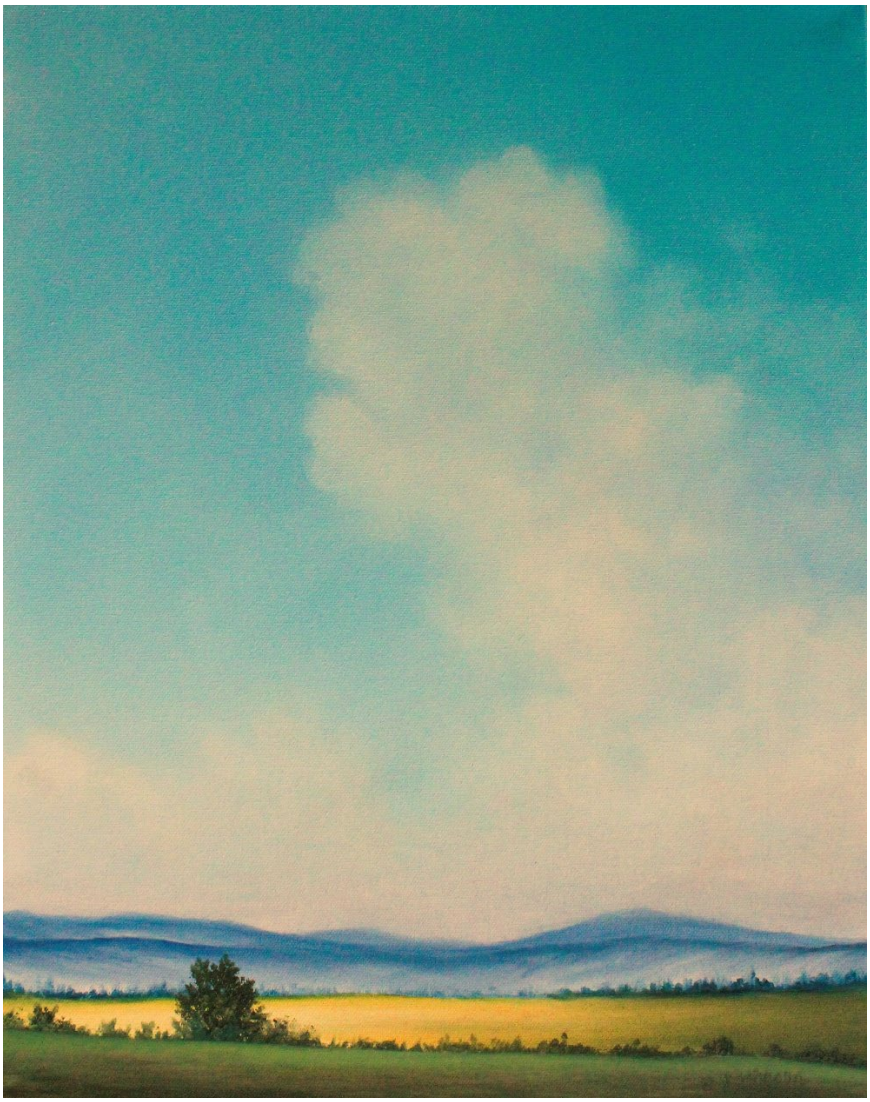

OPTION A

OPTION B

OPTION C

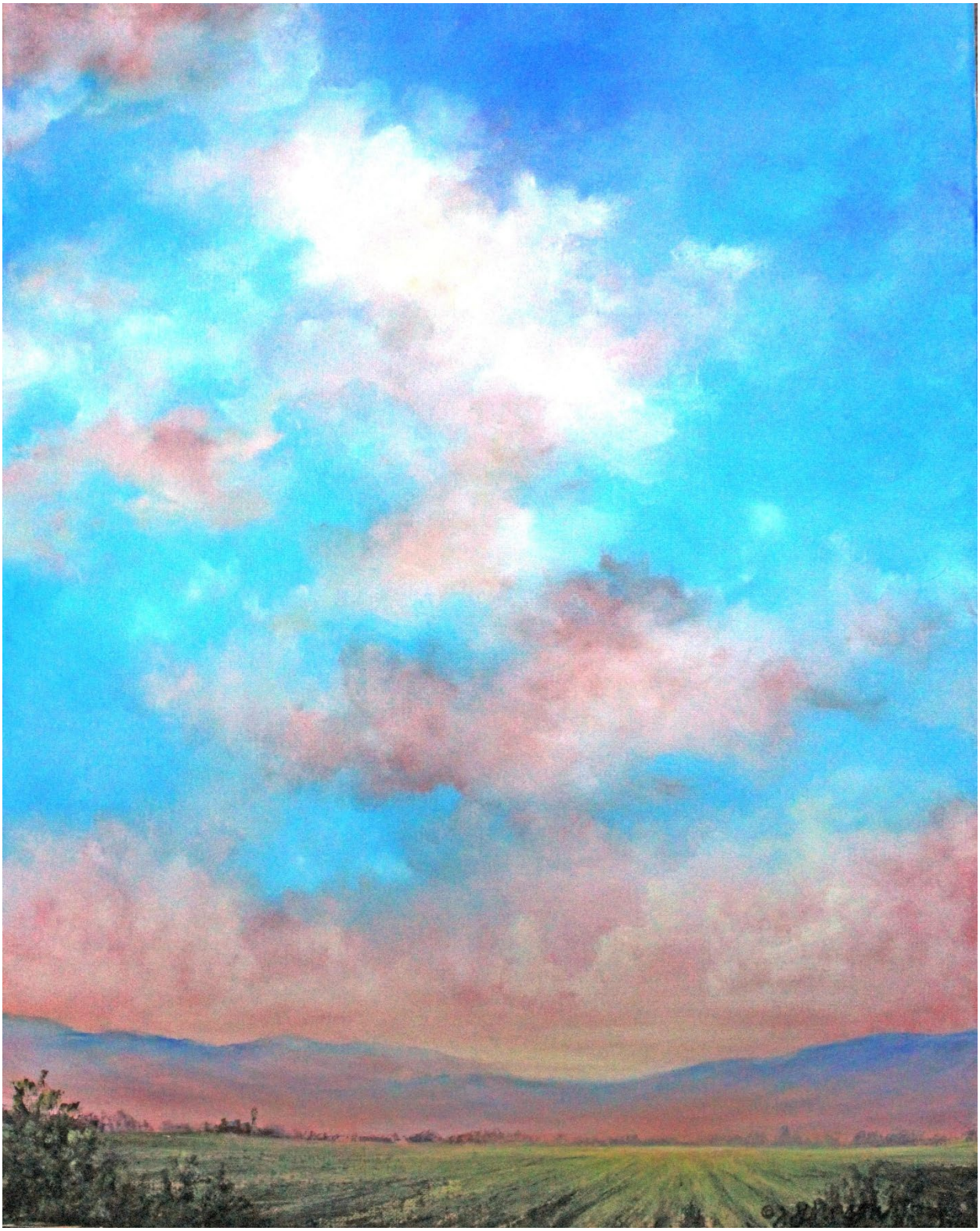

OPTION D

OPTION E

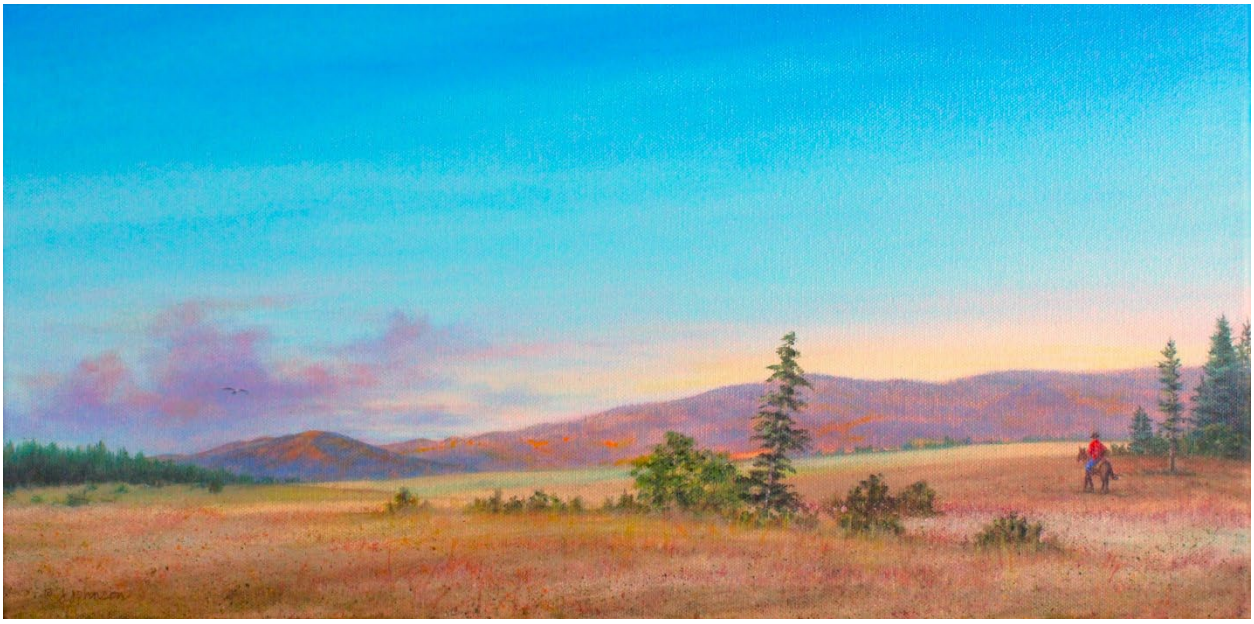

OPTION F

OPTION G

Building Community
Through the Arts.

Ellensburg Arts Commission
501 N. Anderson Street
Ellensburg WA 98926
509.962.7149
Ellensburg Arts | Ellensburg, WA

Call for Artists: Bus Shelter Art – Rotary Park

The Ellensburg Arts Commission invites artists to submit design concepts for a new bus shelter installation at Rotary Park. Selected artwork will be reproduced on glass panels and should reflect the natural character of the park, as well as its role as a shared community space in Ellensburg.

One artist will be selected to develop a final design for the shelter's glass panels.

Art Concept
Proposed artwork should reflect Rotary Park as a vibrant, family-friendly sports and recreational destination. Designs are encouraged to capture the energy of play, outdoor activity, and community connection—highlighting elements such as youth sports, open green space, movement, and the ways families and residents gather, recreate, and engage in the park.

Project Details

- The bus shelter includes four panels, each approximately 25" x 44".
- Designs will be combined into a single composition across the back wall, totaling approximately 60" x 90".
- Final artwork will be printed in full color on glass by a local contractor.
- The selected artist retains copyright of the artwork; however, the City of Ellensburg reserves the right to use submitted images for promotional purposes.

Stipend
The selected artist will receive a $500 stipend.

Timeline

- **Submission Deadline:** July 30, 2026
- **Artist Notification:** August 19, 2026

Submission Requirements

- One complete concept design for the bus shelter installation (*clearly identify submission for consideration)*
- Up to five samples of previous work (submitted electronically)
- Artist statement and resume

File Specifications:

- Format: JPEG only
- Dimensions: Minimum 1920 pixels on the longest side
- Resolution: 72 ppi/dpi
- File size: Maximum 5 MB per file

DRAFT

Ellensburg Arts Commission
501 N. Anderson Street
Ellensburg WA 98926
509.962.7149
Ellensburg Arts | Ellensburg, WA

Submit materials to: ellensburgarts@ci.ellensburg.wa.us

Qualifications

- Preference will be given to artists residing within the City of Ellensburg
- Submitted work must have been created within the past three years
- Artwork should reflect the specific Art Concept noted.

Evaluation Criteria

Submissions will be evaluated based on overall design quality, creativity, and the ability to successfully translate the artwork onto glass panels—utilizing the provide rendering and template.

Template example:

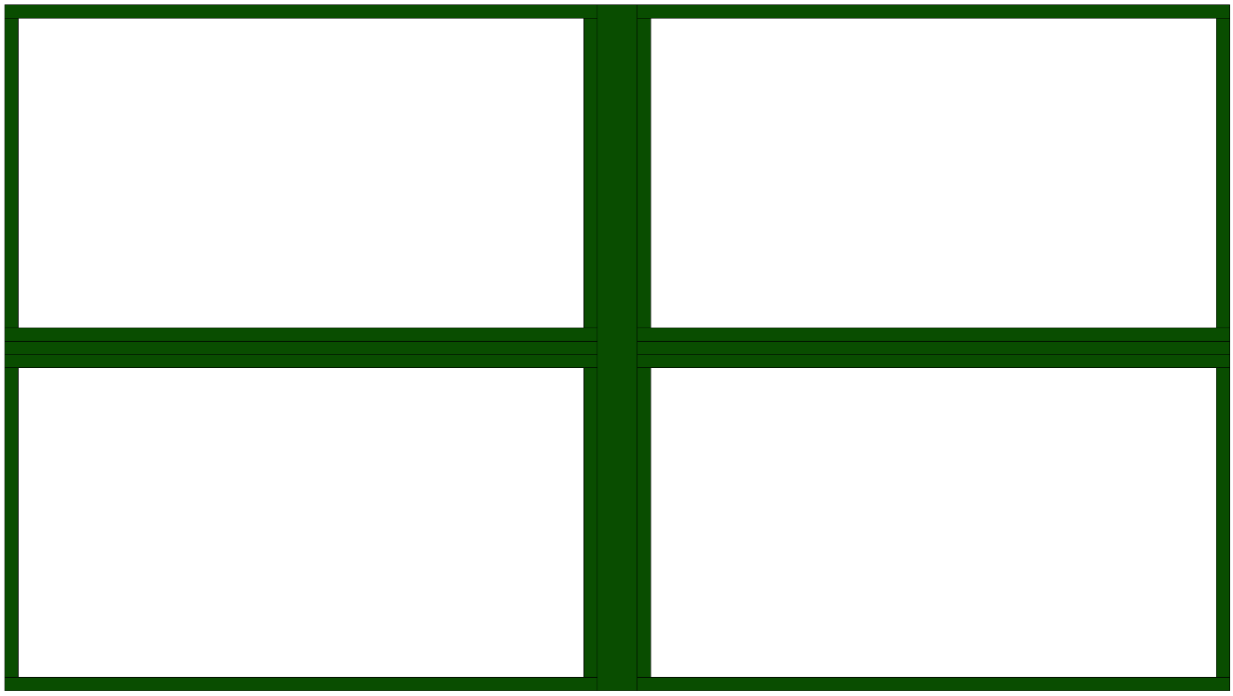

DRAFT

REV	REVISION HISTORY DESCRIPTION	DATE APPROVE

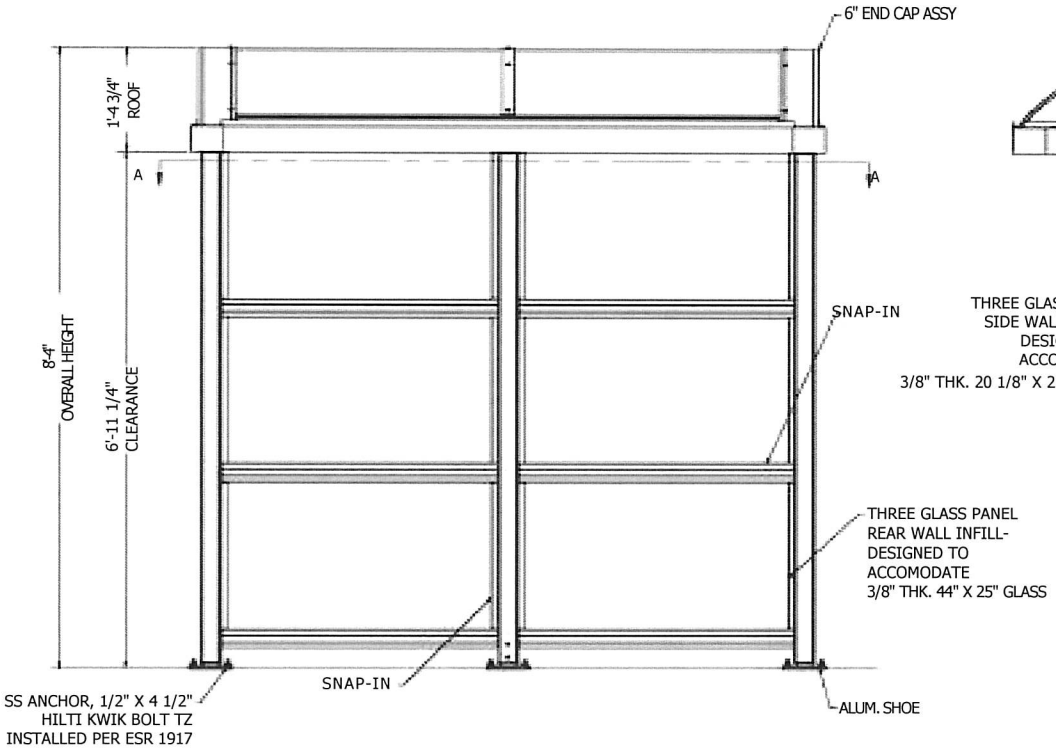

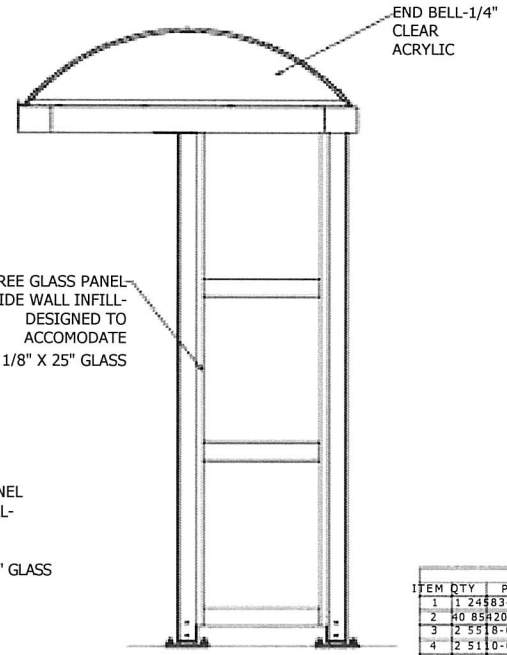

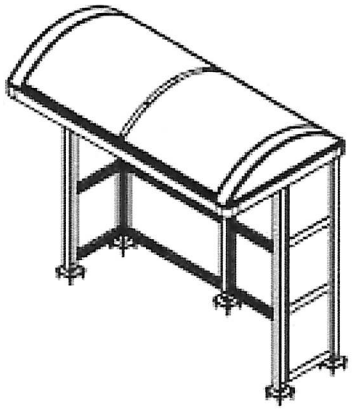

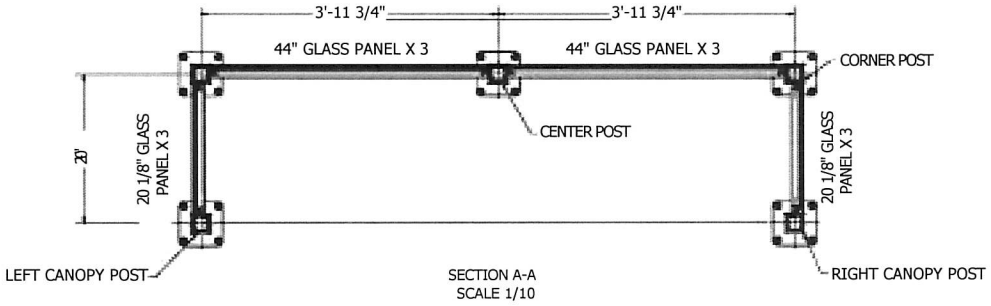

SECTION A-A
SCALE 1/10

PARTS LIST

ITEM	QTY	PART NUMBER	DESCRIPTION
1	1	24583-00	8' DOME ROOF ASSEMBLY
2	40	8542075	SMS #8 X 3/4" PH PAN HD SELF DRILLING
3	2	5518-01	End Band Assy., 4' Dp. "Niagara" Roof
4	2	5110-00	POST, CORNER, STANDARD
5	1	6732-00	POST WELDMENT, ROOF TRIM MTD.
6	9	8086115	BOLT, 3/8-16 x 1" HEX HEAD, STN STL
7	9	8685100	FLAT WASHER, 3/8", STN STL
8	9	8705068	LOCK WASHER, 3/8", STN STL
9	20	8537055	DRIVE SCREW, #14 X 3/4", STN STL
10	1	7884-00	CANOPY POST WELDMENT, NO ELECTRIC, RIGHT
11	1	7885-00	CANOPY POST WELDMENT, NO ELECTRIC, LEFT
12	2	20732-00	REAR GLASS FRAME, WELDMENT
13	2	24569-00	SIDE GLASS FRAME, WELDMENT
14	2	5509-00	END PANEL, ACRYLIC, ARCH, CLEAR
15	6	20.125 X 25 GLAZING	SIDE WALL PANEL GLASS
16	6	44 X 25 GLAZING	REAR WALL PANEL GLASS
17	24	20050-00	SNAP-IN, VERTICAL MULLION FOR 44" PANEL
18	12	24576-00	SNAP-IN, HORIZ. MULLION FOR 44" PANEL
19	12	20051-00	SNAP-IN, HORIZ. MULLION FOR 44" PANEL
20	5	7370-00	Shoe, 7" Sq. Base, 2.5" Sq. x 9" Tube, Steel
21	20	8037450	ANCHOR KWIK BOLT TZ 1/2 X 4 1/2 STN. STL.
54	10	8645150	TEK SCREW, #14 X 1-1/2", SELF TAP, FLANGE HD W/ NEOPRENE SEAL, ZINC

TOLAR

Tolar Manufacturing Company, Inc
258 Mariah Circle, Corona CA. 92879

ELEV. 4'-6" X 8'-6" NON-AD LOW DOME SHELTER

COMMUNITY TRANSIT

SIZE	MATL	DWG NO	REV NO
D	VARIOUS SEE PARTS LIST	24718-00	-

SCALE 20 : 1 | DATE 2/10/2015 | SHEET NO 1 OF 1 | DRAWN BY jmalgue

THIS DOCUMENT CONTAINS PROPRIETARY INFORMATION AND SUCH INFORMATION MAY NOT BE DISCLOSED TO OTHERS FOR ANY PURPOSE OR USED FOR MANUFACTURING WITHOUT WRITTEN PERMISSION FROM TOLAR MANUFACTURING COMPANY, INC.

T:\Inventor\Eastern\Shelters\Non Ad Dome\24718-00.idw

2023	9/2/2025 11:44 AM	File folder	
2024	11/18/2025 11:41 AM	File folder	
2025	12/11/2025 1:42 PM	File folder	
2026	5/4/2026 12:09 PM	File folder	
A1951 Use of Image Agrmt - Sherry Kaufman.pdf	9/2/2025 1:30 PM	Adobe Acrobat D...	1,037 KB
A1976 - Agrmt for Use of Image - Jerry Slough.pdf	9/2/2025 1:30 PM	Adobe Acrobat D...	974 KB
Bus Shelter Glass Template.png	1/8/2026 5:34 PM	PNG File	19 KB
BUS SHELTER LOCATIONS (002).docx	12/23/2025 2:58 PM	Microsoft Word D...	389 KB
BUS SHELTER LOCATIONS.docx	12/13/2025 7:13 PM	Microsoft Word D...	389 KB
Bus Shelter Rendering.pdf	3/15/2024 7:48 AM	Adobe Acrobat D...	440 KB
Bus Shelter Submissions Combined Binder6-09-09-24.pdf	9/9/2024 11:44 AM	Adobe Acrobat D...	22,191 KB
Bus Shelter Template.psd	1/8/2026 5:34 PM	Adobe Acrobat D...	6,305 KB
Call for Artist-Bus Shelter 2024.docx	5/6/2024 4:41 PM	Microsoft Word D...	286 KB
Call for Artist-Bus Shelter 2024.pdf	5/6/2024 4:41 PM	Adobe Acrobat D...	170 KB
Call for Artist-Bus Shelter 2025.docx	7/3/2025 4:07 PM	Microsoft Word D...	286 KB
Email Instructions.docx	1/8/2026 5:34 PM	Microsoft Word D...	16 KB
Final Combined Call for Artist 2024.pdf	5/16/2024 7:51 AM	Adobe Acrobat D...	841 KB
Notification Letter .docx	9/30/2024 9:03 AM	Microsoft Word D...	732 KB
PO-Jane Orleman 1-28-25.pdf	1/28/2025 9:26 AM	Adobe Acrobat D...	2,821 KB
Rejection Letter.docx	9/24/2024 5:06 PM	Microsoft Word D...	722 KB

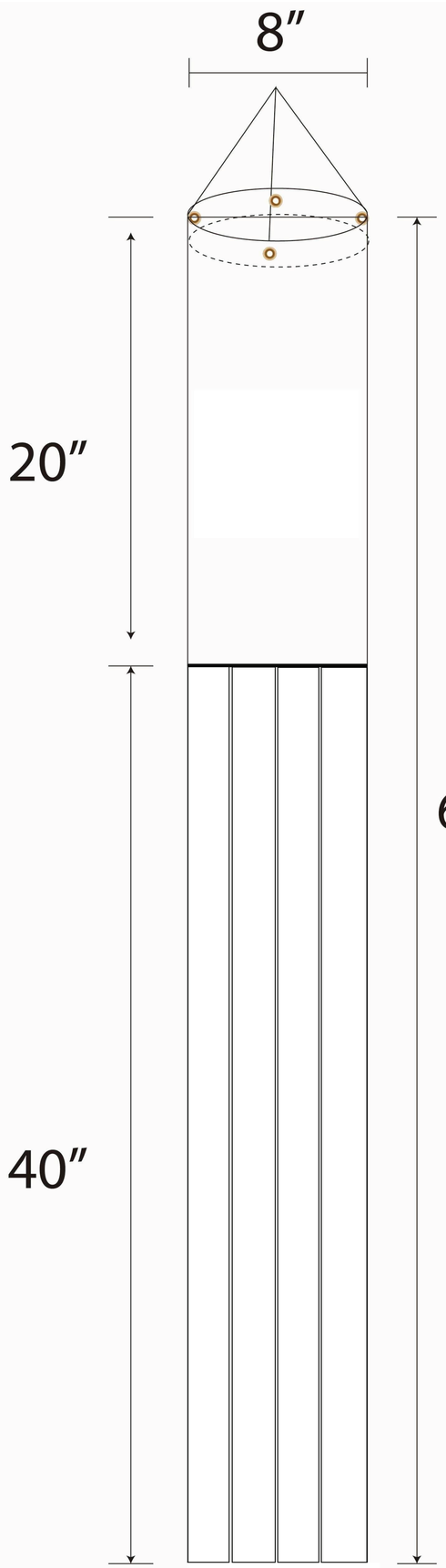
8″
20″
60″
40″

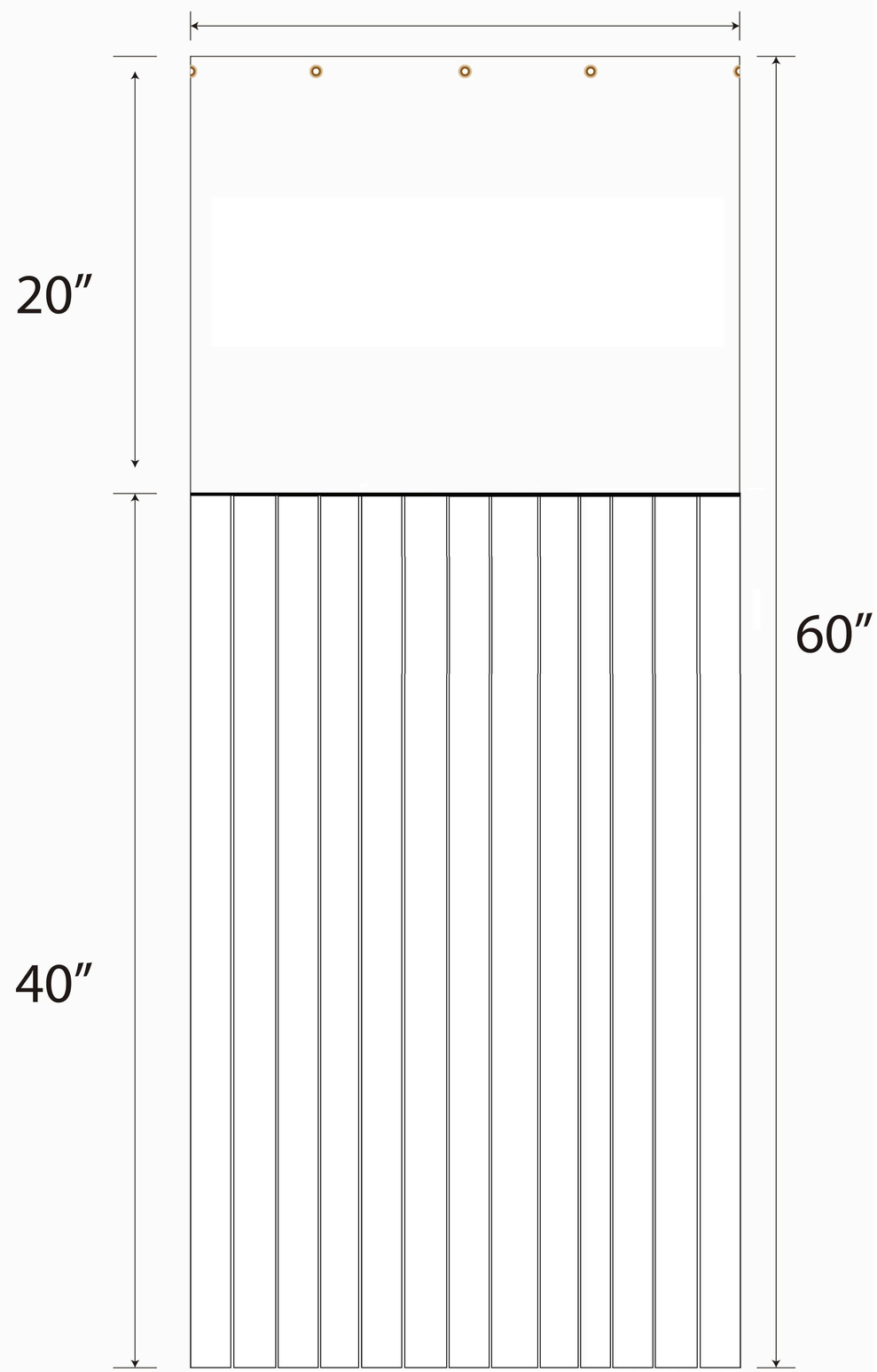
25.12″
20″
60″
40″

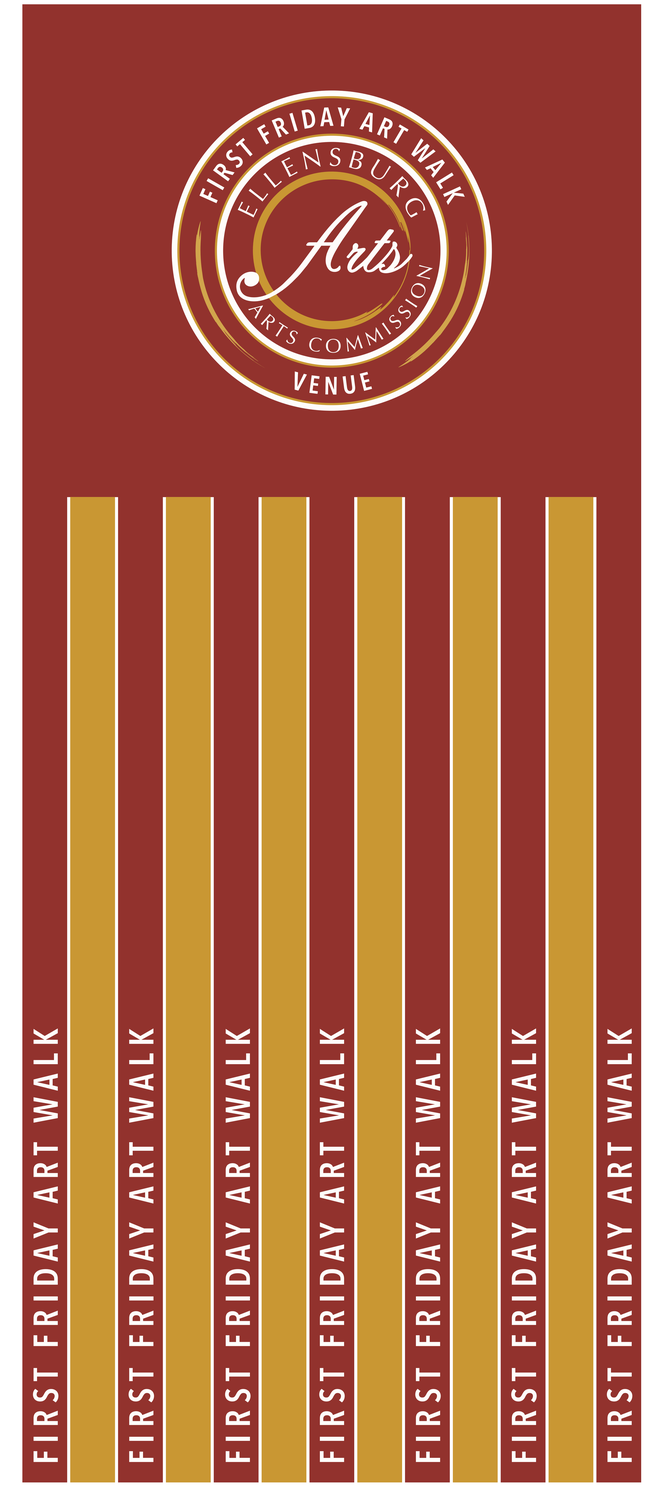
FIRST FRIDAY ART WALK
ELLENSBURG
Arts
ARTS COMMISSION
VENUE
FIRST FRIDAY ART WALK
FIRST FRIDAY ART WALK
FIRST FRIDAY ART WALK
FIRST FRIDAY ART WALK
FIRST FRIDAY ART WALK
FIRST FRIDAY ART WALK
FIRST FRIDAY ART WALK

FIRST FRIDAY ART WALK

ELLENSBURG

Arts

ARTS COMMISSION

VENUE